INSTALLATION AND FINISHING REQUIREMENTS FOR INNER-SEAL® LAP SIDING

Louisiana-Pacific

STORAGE

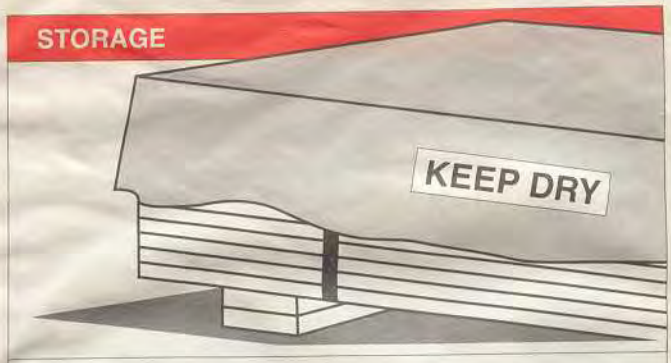

- Material must be kept dry.
- Store siding off the ground, on a flat surface, under a roof or provide a waterproof covering.

NAILABLE SHEATHING INSTALLATION

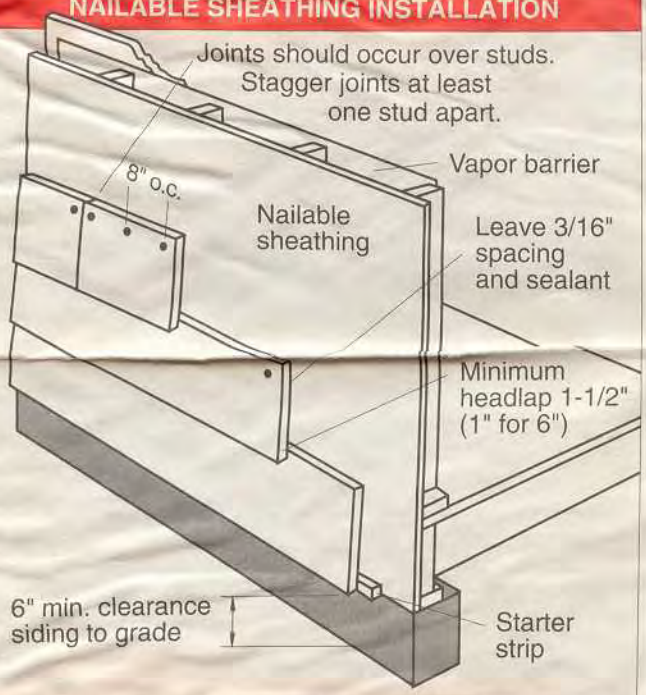

SIDING MUST NOT CONTACT MASONRY.

- Nailing with nailable sheathing can be either 8" o.c. or one nail per stud.
- A continuous positive vapor barrier must be installed on the inside of conditioned exterior walls.
- Siding should be applied to a dry surface.
- Siding can be applied to sheathed or unsheathed walls.
- Joints should occur over studs for maximum strength and smoothness.

DIRECT TO STUD INSTALLATION

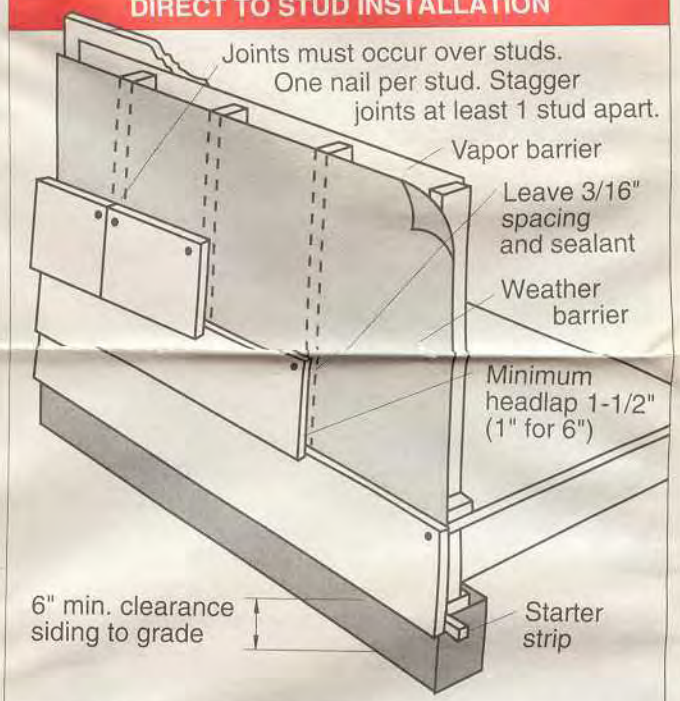

SIDING MUST NOT CONTACT MASONRY.

- Joints on unsheathed walls must occur over studs.
- Unsheathed walls require diagonal bracing or other adequate methods of bracing. (Check local codes.)
- Maximum stud spacing for siding is 24" o.c.
- Unsheathed walls require a weather resistant barrier on the exterior side of the wall. (15 lb. felt, resin coated paper, or a house wrap material approved by local codes.)

MOISTURE PROBLEMS IN THE WALL ASSEMBLY WILL VOID THE WARRANTY

© Louisiana-Pacific Corporation 1994. All rights reserved.

1 MINIMUM 6" GROUND CLEARANCE

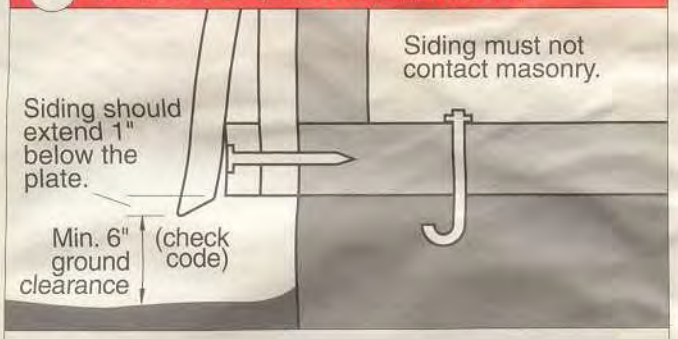

- Siding material is not warranted for fascia or trim.
- First install inside and outside corner trim. (Refer to illustrations numbered 2, 3 and 4 for trim installation details.)
- Level and install starter strip.
- Siding and starter strip must not come in contact with concrete, stucco or any other masonry products.
- Siding must be a minimum of 6" off the ground. (Check your local code requirement.)
- Siding should extend 1" below the plate.

2 INSIDE CORNERS GAP 3/16"

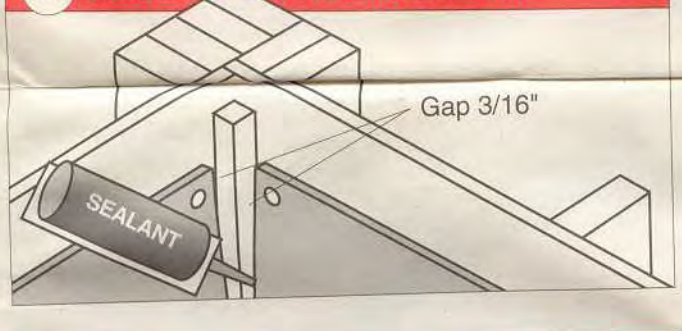

3 OUTSIDE CORNER TRIM GAP 3/16"

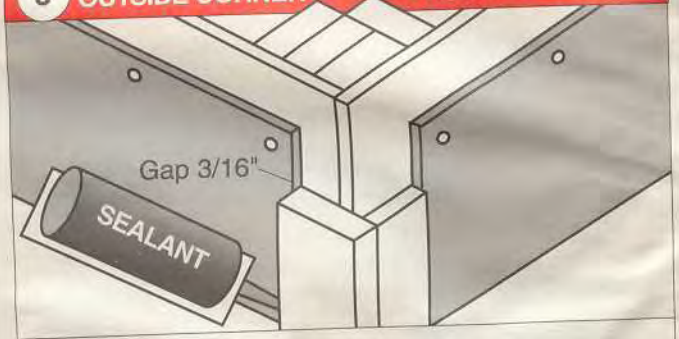

- Use a nonhardening paintable sealant with a manufacturer stated service life of at least 25 years.
- Elastomeric sealants–use ASTM Standard C920. Water based, latex sealants–use ASTM Standard C834.
- Apply sealant according to manufacturer's specs. (L-P recommends cut ends be primed before applying sealant.)
- Seal siding when installing to prevent water intrusion.

4 WRAP CORNER OVERLAP 2" MIN.

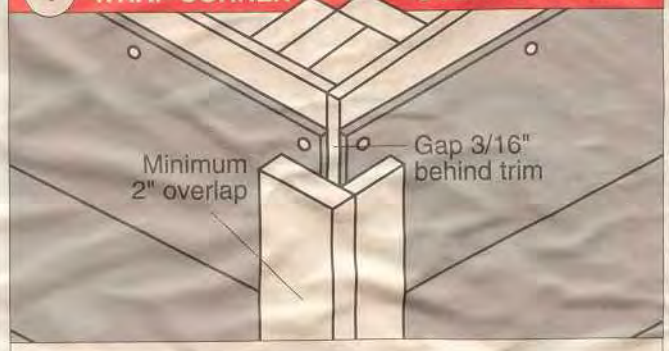

- Seal cut ends before applying trim.

5 BLIND NAILING REQUIRED

- Stapling or face nailing voids the warranty. Where exposed nails are necessary to correct building irregularities, and at cutouts and under the eaves, use a galvanized nail and seal completely with sealant.
- Start nailing at a corner and nail to the other end. Do not nail toward the center from both ends.
- All nails must be stain and corrosion resistant.

6 1-1/2" OVERLAP (8", 10", 12")

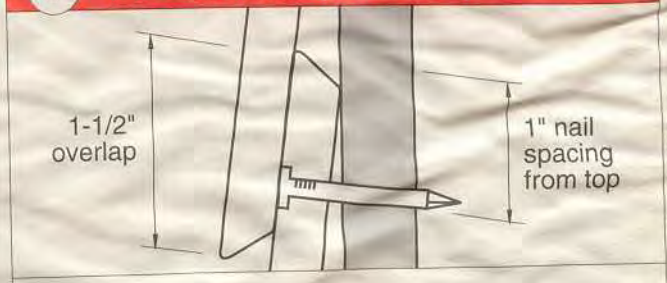

- Overlap 8", 10" and 12" siding 1-1/2". Overlap 6" siding 1".
- Nail siding 1" from the top edge. Nail 6" siding 1/2" from the top edge.
- Proper overlap hides the nails and holds the siding tight.

1 MINIMUM 6" GROUND CLEARANCE

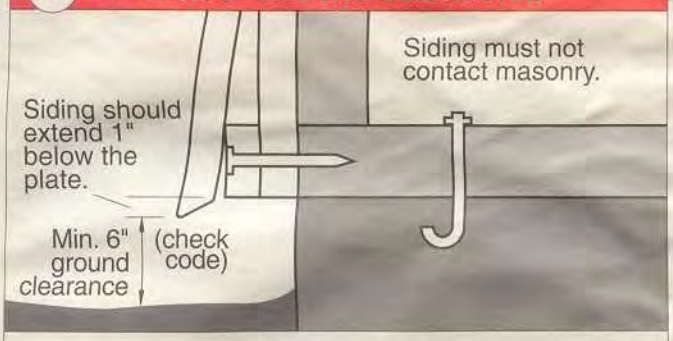

- Siding material is not warranted for fascia or trim.
- First install inside and outside corner trim. (Refer to illustrations numbered 2, 3 and 4 for trim installation details.)
- Level and install starter strip.
- Siding and starter strip must not come in contact with concrete, stucco or any other masonry products.
- Siding must be a minimum of 6" off the ground. (Check your local code requirement.)
- Siding should extend 1" below the plate.

2 INSIDE CORNERS GAP 3/16"

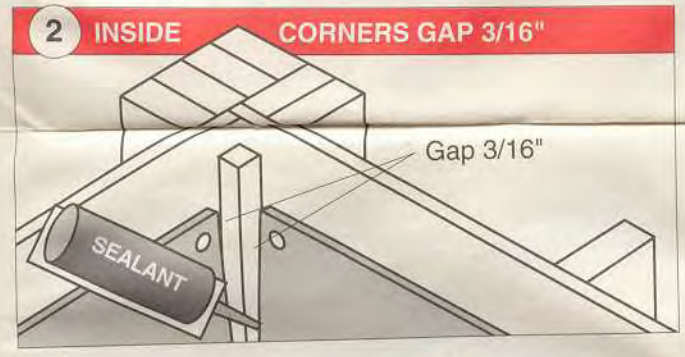

3 OUTSIDE CORNER TRIM GAP 3/16"

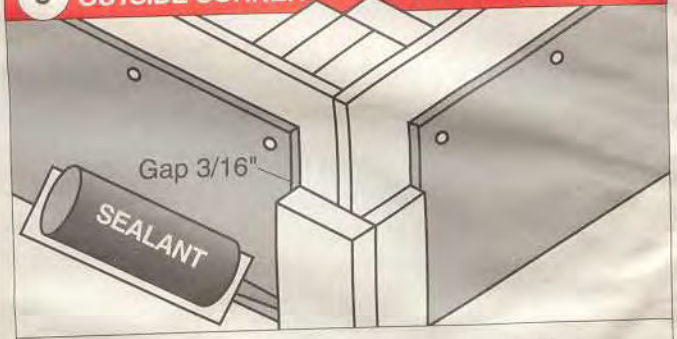

- Use a nonhardening paintable sealant with a manufacturer stated service life of at least 25 years.
- Elastomeric sealants–use ASTM Standard C920. Water based, latex sealants–use ASTM Standard C834.
- Apply sealant according to manufacturer's specs. (L-P recommends cut ends be primed before applying sealant.)
- Seal siding when installing to prevent water intrusion.

4 WRAP CORNER OVERLAP 2" MIN.

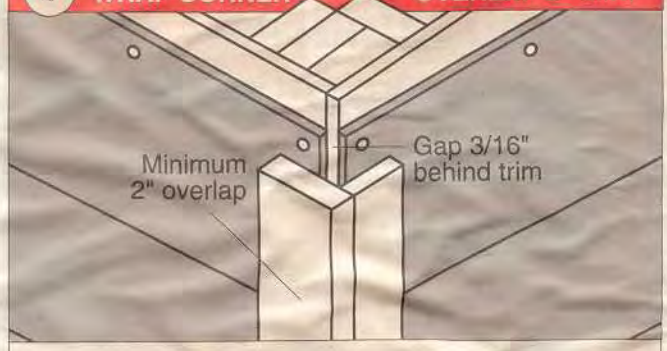

- Seal cut ends before applying trim.

5 BLIND NAILING REQUIRED

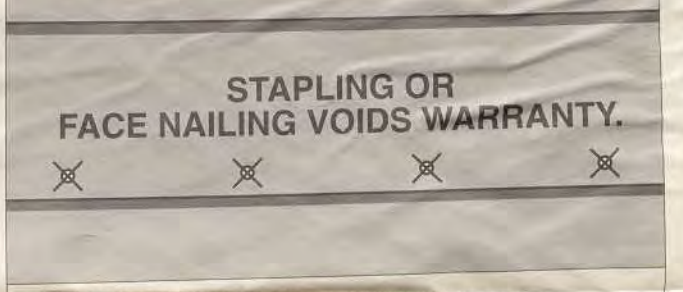

- Stapling or face nailing voids the warranty. Where exposed nails are necessary to correct building irregularities, and at cutouts and under the eaves, use a galvanized nail and seal completely with sealant.
- Start nailing at a corner and nail to the other end. Do not nail toward the center from both ends.
- All nails must be stain and corrosion resistant.

6 1-1/2" OVERLAP (8", 10", 12")

- Overlap 8", 10" and 12" siding 1-1/2". Overlap 6" siding 1".
- Nail siding 1" from the top edge. Nail 6" siding 1/2" from the top edge.
- Proper overlap hides the nails and holds the siding tight.

FINISHING REQUIREMENTS FOR WARRANTY COVERAGE

13 MINIMUM 2.5 DRY MILS

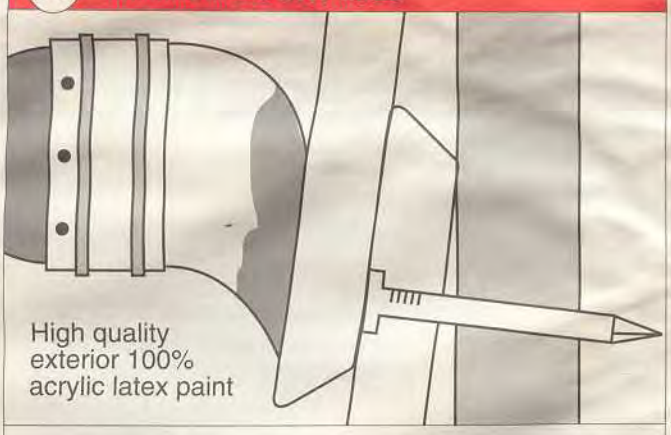

- Siding must be painted within 90 days of application to protect the substrate. If the siding cannot be finished within 90 days, use prefinished siding or completely reprime with a quality, alkyd-based wood primer.
- Surface preparation is extremely important. Prior to painting insure that the surface is free of dirt, mildew or other contaminants.
- Use a high quality, exterior 100% acrylic latex paint, that is specifically recommended for primed wood sidings. Quality exterior, alkyd (oil) based, top coat paints may be used.

  Note: Alkyd top coat paints form a more rigid film that tends to fade, chalk and crack more than the 100% acrylic latex paints and may require more frequent repainting.
- Field applied paint must be a minimum of 2.5 dry mils in addition to the factory primer. This is best achieved by brush applying TWO COATS at the manufacturer's required spread rate. (Research has indicated that the optimum thickness for the primer and top coats, is 4 to 5 dry mils.)
- The paint can be applied by sprayer, roller or brush as long as all exposed edges are completely covered and the resultant film is a minimum of 2.5 dry mils.

14 PAINT ALL GROOVES AND EDGES

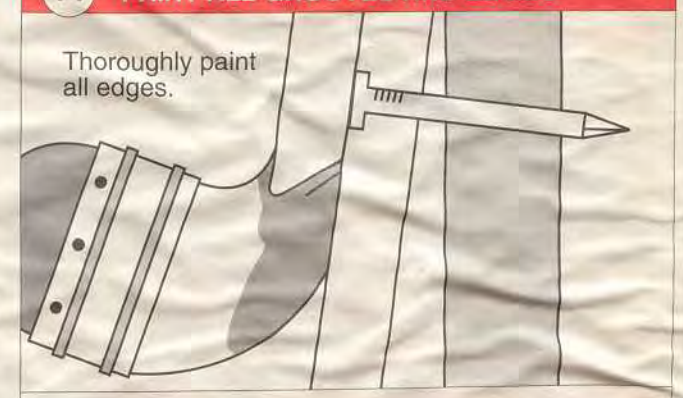

- PREFINISHED SIDING meets painting requirements if the 100% acrylic finish (top coat) is applied according to the paint manufacturer's specifications and is a minimum of 2.5 dry mils or carries a minimum 5-year written warranty on the 100% acrylic finish.
- ALL FINISHES need to be uniform and properly cured for designed performance. IT IS IMPORTANT TO GET COMPLETE COVERAGE ON ALL EDGES AND GROOVES.
- All finishes must be formulated to be mildew resistant and applied according to the paint manufacturer's requirements for proper surface preparation, spread rate, application methods, TEMPERATURE AND MOISTURE CONDITIONS.

  DO NOT USE: Semitransparent stains; shake and shingle paints; vinyl based resin combinations (vinyl acetates, PVA, vinyl acrylic, vinyl acetate/acrylic copolymer paints).

L-P IS NOT RESPONSIBLE FOR THE PERFORMANCE OF FIELD OR MACHINE APPLIED FINISHES.

FAILURE TO FOLLOW L-P'S FINISHING REQUIREMENTS VOIDS THE WARRANTY AND MAY LEAD TO EXPENSIVE DAMAGE TO THE SIDING.

For a copy of the warranty or installation and technical questions call L-P customer services:

800-648-6893

8am - 5pm Central Standard Time

Contact for Sales Information:

708-517-8833
Chicago, Illinois

409-756-0541
Houston, Texas

208-772-6011
Hayden Lake, Idaho

Louisiana-Pacific
111 SW Fifth Avenue
Portland, Oregon 97204

LP, Louisiana-Pacific and Inner-Seal are registered trademarks of Louisiana-Pacific Corporation.

NOTE: Louisiana-Pacific Corporation periodically updates and revises its product information. To verify that this version is current, contact one of the sales offices.

August 1994
2-3-D/S-4 260M

Printed in USA

TCF Printed using totally chlorine-free pulp.

OWNER MAINTENANCE REQUIREMENTS FOR INNER-SEAL® SIDING

Louisiana-Pacific

TO ENSURE WARRANTY COVERAGE AND TO PROTECT THE BEAUTY OF YOUR WOOD SIDING AND TRIM, THE OWNER SHOULD COMPLETE AN ANNUAL INSPECTION USING THE FOLLOWING CHECKLIST COVERING OWNER MAINTENANCE:

1. Check all siding and trim for damage. Damaged material should be replaced and the conditions that caused the damage corrected.

2. Check all joints and seams for cracked or missing sealant. If sealant is cracked, remove the old material, clean and reseal with a long life (minimum 25-year) sealant. Holes from exposed nails must be sealed.

3. Check paint film for cracking, peeling, fading, or chalking. Be sure to inspect the bottom or drip edges of the siding along the bottom rows and under window casings. Touch up the paint system as required following the paint manufacturer's instructions.

4. Check the exterior for signs of mildew. It is important to keep the exterior of the home clean and free of mildew. Mildew will grow on almost any surface where conditions are favorable. Mildew may grow on painted sidings if the painted surface area provides an organic food source and there is warmth and moisture. In high humidity areas it is important to use finishes that contain mildewcides which inhibit the growth of mildew. For mildew prone areas, many paint manufacturers provide "special mildewcides" which can be added to the paint for improved mildew protection of the finish. Mildew can be removed with commercial mildew removers following the manufacturer's instructions. Mildew must be killed and the surface cleaned before refinishing. Otherwise it may continue to grow through the newly applied finish. Treatment of these conditions is the homeowner's responsibility. **Control of mildew on the paint surfaces is the responsibility of the homeowner. Louisiana-Pacific assumes no responsibility for the treatment or prevention of mildew.**

5. Check flashings and gutters for damage or blockage. Ensure that water from the roof is not permitted to run down the siding or is not allowed to splash back onto the siding. **Siding should not stand in water or be in continuous contact with moist surfaces. This type of contact will lead to the deterioration of wood-based materials.**

6. Keep shrubbery and other vegetation cut back so that it does not come in direct contact with wood siding or trim.

7. Maintain a 6" minimum clearance from the ground to any untreated wood sidings or trim.

8. Check sprinkler adjustment regularly to ensure that sprinklers are not spraying water directly onto the siding or trim.

LOUISIANA-PACIFIC'S INSTALLATION INSTRUCTIONS ARE BASED ON MEETING BUILDING CODE REQUIREMENTS, PRODUCT RATING STANDARDS AND WARRANTY REQUIREMENTS TO ENSURE THE LONG LIFE AND PERFORMANCE OF THE SIDING. FAILURE TO FOLLOW THE INSTALLATION, FINISHING AND MAINTENANCE INSTRUCTIONS, MAY CAUSE COMPLIANCE PROBLEMS WITH BUILDING AND PRODUCT CODES AND/OR MAY RESULT IN VOIDING THE LIMITED WARRANTY.

For a copy of the warranty or installation and technical questions call L-P customer services:

800-648-6893

8am - 5pm Central Standard Time

Louisiana-Pacific
111 SW Fifth Avenue
Portland, Oregon 97204

Louisiana-Pacific and Inner-Seal are registered trademarks of Louisiana-Pacific Corporation.

NOTE: Louisiana-Pacific Corporation periodically updates and revises its product information. To verify that this version is current, contact one of the sales offices.

August 1994
2-3-D/S-4 260M

Printed in USA

TCF Printed using totally chlorine-free pulp

© Louisiana-Pacific Corporation 1994. All rights reserved.

technical note AMERICAN PLYWOOD ASSOCIATION

P.O. Box 11700, Tacoma, Washington 98411 / Area Code 206-565-6600 / TLX 32-7430

NUMBER L805A

February 1987

MILDEW DISCOLORATION OF WOOD SIDING

INTRODUCTION

Mildew is a living organism, a fungus which is normally observed as a black or dull grey deposit on exterior or interior surfaces. It can easily be mistaken for dirt. Mildew develops from microscopic spores which are carried in the air to a surface where they feed and grow. Fungi are plants which contain no green chlorophyll and, thus, cannot make their own food. They must live on material that possesses organic matter. Mildew will grow on almost any surface where conditions are favorable. For example, mildew will grow on metal, not because it feeds on the metal itself, but rather on a thin film of organic material that has accumulated on the metal. In addition to a food source, warmth, moisture and a shady location all encourage the growth of mildew. Mildew is a surface phenomenon that is a problem principally because of its appearance. It does not affect the strength or other important properties of wood. Naturally, light-colored finishes show mildew more readily than dark-colored ones.

Mildew may grow on painted sidings, but proper construction practices, maintenance, and the use of finishes containing mildewcides will help minimize its growth and often eliminate it.

IDENTIFYING MILDEW

Black spotted areas on siding are quite frequently thought to be dirt, when in reality they are mildew. Identification is important because the treatment is different than for dirt. A confirmatory test for mildew can be made by applying a drop of 5% sodium hypochlorite solution (common household bleaching solution) to the dark area. Mildew will usually bleach within one or two minutes. Dark areas which do not bleach are probably dirt. (Note: it is important to use fresh bleach solution because, after standing six months or longer, bleach deteriorates and may no longer be sufficiently potent.)

REMOVING MILDEW

Mildew can be removed with commercial mildew removers or mildewcides, following manufacturer's directions, or with a solution of one part household bleach (5% sodium hypochlorite) mixed in three parts by volume of warm water. On some finishes, a milky film may develop from the bleaching treatment. Thorough rinsing of the entire area with clean water will help alleviate this condition.

When using bleach, avoid breathing the vapors and contact with the skin and eyes. Shrubs and other plant life should also be protected. Children and pets should be kept away from these products.

REFINISHING

Many mildew problems require only the bleach treatment mentioned above. However, if the finish has deteriorated to the point where a new finish is required, mildew must be killed and the surface cleaned before refinishing. Otherwise it may continue to grow up through a newly applied finish.

It is important to use finishes that contain ingredients (mildewcides) which inhibit the future growth of mildew on the finish. It is also important to note that mildewcides are generally not permanent and will gradually lose their effectiveness. Thus, if conditions favorable to the growth of mildew continue to exist, in time mildew may reappear on the new finish. If this occurs, remove the mildew following the previously described procedure.

For mildew-prone areas, many paint manufacturers provide "special mildewcides" which can be added to a finish for improved mildew protection of the finish. Check with your local paint supplier for his recommendations. These additives must be thoroughly dispersed in the finish in order to be effective. Therefore, it is advisable to have the mildewcide added by your paint supplier using his mixing equipment.

Reprinted by permission of the American Plywood Association.

LIMITED WARRANTY FOR INNER-SEAL® SIDINGS

Louisiana-Pacific

LIMITED 25-YEAR SIDING WARRANTY

Louisiana-Pacific Corporation ("L-P") warrants the Inner-Seal® lap and panel sidings, when installed and finished according to the published installation and finishing instructions and when properly maintained, for a period of 25 years from the date of installation against manufacturing defects under normal conditions of use and exposure.

LIMITATIONS

L-P MUST BE GIVEN A 60-DAY OPPORTUNITY TO INSPECT THE SIDING BEFORE IT WILL HONOR ANY CLAIMS UNDER THE ABOVE WARRANTY. IF AFTER INSPECTION AND VERIFICATION OF THE PROBLEM, L-P DETERMINES THAT THERE IS A FAILURE COVERED BY THE ABOVE WARRANTY, L-P WILL REFUND TO THE OWNER AN AMOUNT OF MONEY EQUAL TO TWICE THE RETAIL COST OF THE ORIGINAL SIDING MATERIAL. THE COST OF LABOR AND MATERIALS OTHER THAN SIDING ARE NOT INCLUDED. WARRANTY PAYMENTS WILL BE BASED UPON THE AMOUNT OF AFFECTED SIDING MATERIAL.

DURING THE FIRST 5 YEARS, L-P'S OBLIGATION UNDER THE ABOVE WARRANTY SHALL BE LIMITED TO TWICE THE RETAIL COST OF THE SIDING MATERIAL WHEN ORIGINALLY INSTALLED ON THE STRUCTURE.

IF THE ORIGINAL SIDING COST CANNOT BE ESTABLISHED BY THE OWNER THE COST SHALL BE DETERMINED BY L-P IN ITS SOLE AND REASONABLE DISCRETION.

DURING THE 6TH THROUGH 25TH YEAR, AS DETERMINED IN THE ABOVE MANNER, WARRANTY PAYMENTS SHALL BE REDUCED EQUALLY EACH YEAR SUCH THAT AFTER 25 YEARS FROM THE DATE OF INSTALLATION NO WARRANTY SHALL BE APPLICABLE.

THE ABOVE WARRANTY SHALL APPLY ONLY IF THE INNER-SEAL SIDING IS SUBJECTED TO NORMAL SIDING USE AND EXPOSURE. THE SIDING MUST BE STORED, HANDLED, INSTALLED, FINISHED AND MAINTAINED IN ACCORDANCE WITH L-P'S PUBLISHED INSTRUCTIONS. FAILURE TO FOLLOW SUCH INSTRUCTIONS WILL VOID THIS WARRANTY.

IMPORTANT NOTICE:

FAILURE TO INSTALL, FINISH AND MAINTAIN IN ACCORDANCE WITH L-P'S PUBLISHED INSTRUCTIONS MAY CAUSE DAMAGE TO THE SIDING AND WILL VOID THIS WARRANTY.

CONDITIONS COVERED BY THIS WARRANTY

- DELAMINATION OF THE OVERLAY FROM THE SUBSTRATE.
- RESIN SPOTS.
- SPOTS ON OVERLAY RESULTING FROM A MANUFACTURING PROCESS WHICH CANNOT BE COVERED WITH PAINT.
- FOLDED OR "POPPED" WAFERS/STRANDS THAT BREAK THE OVERLAY SURFACE.
- CRACKING, PEELING, CHIPPING OR FLAKING OF THE OVERLAY SURFACE.
- EXCESSIVE OR MISSING SEALANT ON EDGES AND/OR GROOVES.
- DIMENSIONAL VARIANCE FROM SPECIFICATIONS, AT THE TIME OF SALE.
- PATTERN VARIANCES FROM SPECIFICATIONS.

CONDITIONS NOT COVERED BY THIS WARRANTY

- FAILURES DUE TO MOISTURE IN THE WALL CAVITY.
- FAILURES DUE TO INSUFFICIENT PAINT COVERAGE ON FACE AND EXPOSED EDGES.
- FAILURES DUE TO FAILURE OF THE PAINT SYSTEM.
- FAILURES RELATED TO MOLD, MILDEW AND/OR ALGAE ON PAINTED SIDING SURFACE.
- FAILURES DUE TO FACE NAILING ON LAP SIDING.
- FAILURES DUE TO INADEQUATE SPACING AND/OR SEALANT.
- FAILURES DUE TO UNCONTROLLED WATER RUNOFF OR INADEQUATE FLASHING.
- FAILURES DUE TO SIDING BEING IN DIRECT CONTACT WITH MASONRY AND/OR LESS THAN 6" FROM THE GROUND.
- FAILURES DUE TO SPRINKLERS SPRAYING ON THE SIDING.

DISCLAIMER: LOUISIANA-PACIFIC DISCLAIMS ALL WARRANTIES, EXPRESS OR IMPLIED, REGARDING UTILITY GRADE INNER-SEAL SIDING, INCLUDING IMPLIED WARRANTIIES OF MERCHANTABILITY OR FITNESS FOR A PARTICULAR PURPOSE. THE FOREGOING EXPRESS WARRANTIES ARE APPLICABLE ONLY TO OUR A-GRADE PRODUCT AND NOT OUR UTILITY GRADE WHICH IS SOLD "AS IS AND WITH ALL FAULTS". EXCEPT FOR THE EXPRESS WARRANTY AND REMEDY SET FORTH ABOVE, [illegible] WARRANTIES, EXPRESS OR IMPLIED, INCLUDING IMPLIED WARRANTIES OF MERCHANTIBILITY OR FITNESS FOR A PARTICULAR PURPOSE. NO OTHER WARRANTY WILL BE MADE BY OR ON BEHALF OF THE MANUFACTURER OR THE SELLER OR BY OPERATION OF LAW WITH RESPECT TO THE PRODUCT OR ITS INSTALLATION, STORAGE, HANDLING, MAINTENANCE, USE, REPLACEMENT OR REPAIR. NEITHER L-P NOR THE SELLER SHALL BE LIABLE BY VIRTUE OF ANY WARRANTY, OR OTHERWISE, FOR ANY SPECIAL, INCIDENTAL OR CONSEQUENTIAL LOSS OR DAMAGE RESULTING FROM THE USE OF THE PRODUCT. L-P MAKES NO WARRANTY WITH RESPECT TO INSTALLATION OF THE PRODUCT BY THE BUILDER OR THE BUILDER'S CONTRACTOR, OR ANY OTHER INSTALLER. SOME STATES DO NOT ALLOW THE EXCLUSION OR LIMITATION OF INCIDENTAL OR CONSEQUENTIAL DAMAGES, AND IN SUCH STATES THE ABOVE LIMITATION OR EXCLUSION MAY NOT APPLY TO YOU. THIS WARRANTY GIVES YOU SPECIFIC LEGAL RIGHTS AND YOU MAY ALSO HAVE OTHER RIGHTS WHICH VARY FROM STATE TO STATE.

SEE REVERSE SIDE FOR WARRANTY CHECKLIST TO ENSURE SIDING PERFORMANCE AND VALIDITY OR WARRANTY.

Louisiana-Pacific
111 SW Fifth Avenue
Portland, Oregon 97204

LP, Louisiana-Pacific and Inner-Seal are registered trademarks of Louisiana-Pacific Corporation.

NOTE: Louisiana-Pacific Corporation periodically updates and revises its product information. To verify that this version is current, contact one of the sales offices.

August 1994
2-3-D/S-4 260M

Printed in USA

TCF Printed using totally chlorine-free pulp.

© Louisiana-Pacific Corporation 1994. All rights reserved.

WARRANTY CHECKLIST FOR INNER-SEAL® SIDING

Louisiana-Pacific

THIS CHECKLIST PROVIDES GUIDELINES FOR PROPER INSTALLATION, FINISHING AND MAINTENANCE OF INNER-SEAL LAP AND PANEL SIDINGS. FOLLOWING THESE RECOMMENDATIONS WILL ENSURE YEARS OF SIDING PERFORMANCE AND THAT YOUR WARRANTY IS VALID.

CONSTRUCTION/INSTALLATION

- ❒ Siding was stored off the ground and kept dry.
- ❒ Siding was kept dry during the installation process.
- ❒ Installation meets local building and energy codes.
- ❒ Dry exterior wall cavity design and construction have been utilized. A vapor retarder on the warm side of all exterior walls is required to prevent interior moisture from gaining access to the wall cavity. (Weather barrier over the sheathing is recommended.)
- ❒ An exterior weather barrier is required when lap siding is applied direct to studs.
- ❒ Stud spacing and blocking meets local code requirements and provides a flat, smooth plane for the siding.
- ❒ A minimum of 6" clearance ground-to-siding exists around the perimeter of the home.
- ❒ Siding joints are directly over studs with 3/16" spacing for lap siding joints.
- ❒ Spacing of 3/16" at all corner, window, door, and utility trim joints has been allowed.
- ❒ Siding has a minimum 2" clearance on roof rakes and chimneys.
- ❒ Siding is protected from direct contact with any form of masonry: foundations, chimneys, patios, steps, and sidewalks.
- ❒ Proper length corrosion resistant nails have been used. (No stapling allowed.)
- ❒ Blind nailing is used for all lap siding.
- ❒ 1-1/2" overlap on 8" and wider siding nailed 1" from the top. 1" minimum overlap on 6" siding nailed 1/2" from the top.
- ❒ For panel siding, exposed nails are driven only to the siding surface.
- ❒ Nail panel siding 6" o.c. around perimeter and 12" o.c. on intermediate supports.
- ❒ Siding material is not suitable for trim and/or fascia and should not be used for these applications. (L-P Inner-Seal trim and fascia or solid wood should be used.)

SEALING/FINISHING

- ❒ Siding was finished within 90 days of installation.
- ❒ Siding was clean of construction dirt, dust, and stains before painting.
- ❒ Siding has been finished with a minimum of 2.5 dry mils in addition to the factory primer.
- ❒ Paint is a high quality 100% acrylic latex or other comparable finish specifically recommended and warranted for factory primed siding.
- ❒ Paint was applied according to the manufacturer's recommendations for temperature and moisture conditions. (Some paint manufacturers recommend an alkyd primer over factory-primed wood sidings.)
- ❒ Semigloss paints provide better performance against moisture, mold, and mildew and should be used in high moisture, high humidity climates.
- ❒ All bottom edges are fully painted with a minimum of 2.5 dry mils in addition to the factory primer.
- ❒ All joints, cuts, and exposed nails (lap siding) are sealed with a high quality nonhardening 25-year paintable sealant.

OWNER MAINTENANCE

- ❒ Sprinklers do not splash water on the siding.
- ❒ Water from roofs and gutters is diverted away from the siding.
- ❒ Shrubs, trees, and plants do not have direct contact with the siding.
- ❒ The painted surface is kept free of mold, mildew, and algae.
- ❒ The siding is repainted before the paint fails.

For a copy of the warranty or installation and technical questions call L-P customer services:

800-648-6893

8am - 5pm Central Standard Time

Maintaining Your Wood Siding

Homeowner Tips from Louisiana-Pacific

Properly installed and maintained siding gives your home an attractive appearance and forms a protective exterior skin around your house. By providing protection from the elements, well-maintained siding plays a key role in safeguarding the value of your house.

How to Maintain Your Wood-Based Siding

Properly installed siding will provide lasting value—if you provide the right kind of maintenance. As a homeowner, you should:

- have the siding repainted before the existing paint fails (consult your paint manufacturer's recommendations for repainting),
- make sure sprinklers do not spray water directly onto the siding or trim,
- keep roof surfaces and gutters in good repair so that water is diverted away from the siding,
- trim shrubs, trees and plants a minimum of one foot from siding,
- keep the painted surface free of mold, mildew and algae,
- maintain a six-inch minimum clearance from the ground to any untreated wood siding or trim. Don't allow garden mulch or barkdust to build up to within six inches of siding bottom,
- maintain a 1/2 inch per foot slope away from the foundation so that water drains away from the house,
- replace missing or damaged caulking around joints, seams, windows, doors and any areas where different surfaces meet.

Inspecting Your Siding

Inspecting your siding is an essential part of maintenance. Once or twice a year:

- check paint for cracking, peeling, fading or chalking. Be sure to inspect the bottom rows and under window casings,
- check all siding and trim for damage,
- check all joints and seams for cracking or missing sealant,
- check the exterior for signs of mildew,
- check flashings and gutters for damage or blockage.

Check exterior paint closely, making sure bottom edges of siding are covered. Always repaint before your current paint fails.

Louisiana-Pacific®

Repainting

Properly applied paint is the best protection for your siding. When painting or repainting, use a high-quality all-acrylic house paint. Remove all dust and mildew from the surface before applying paint. Avoid painting surfaces that are damp, too hot or too cold. Be sure to follow the paint manufacturer's instructions carefully.

Make sure paint covers all exposed surfaces. It is especially important to cover the bottom edge or drip edge of all siding boards. Paint may be applied by sprayer, roller or brush. If you use sprayers or rollers, you'll need to make an extra effort to be sure bottom edges are covered.

The paint must build up to a minimum of 2.5 dry mils thickness. This is best achieved by applying two coats of unthinned paint at the manufacturer's required spread rate.

Minor Repairs

The following will help you maintain your oriented strand board siding. **If You Find ...**

...Protruding Nails, drive them to the overlay surface. Don't countersink, unless galvanized casing nails are used. In that case, countersink them so the head does not protrude above the resin overlay of the siding. Caulk the area around the nail head with a non-hardening paintable sealant with a manufacturer stated service life of at least 25 years.

...Minor Surface Dents and Cracks, fill them with a shrink-resistant exterior vinyl spackling compound. Deeper, more serious surface gouges usually require a two-part epoxy filler designed for exterior wood repairs. Before the spackling or filler has completely set, run a wire brush over the repair area to create a textured wood appearance.

...Dried, Brittle Caulking, remove it with a sharp putty knife. For stubborn areas, check your hardware store for an outdoor caulk remover. Re-caulk with a high quality, non-hardening paintable caulk with a service life of 25 years or more. Look on the label for the ASTM Standard C920 for elastomeric sealants or the ASTM Standard C834 for water-based latex sealants.

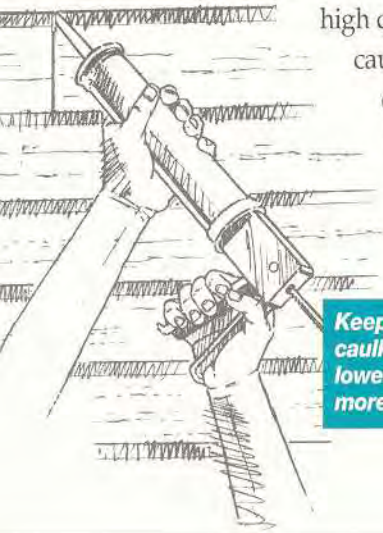

Keep all joints and seams sealed with caulk. Pay particular attention to the lower 1/3 of the wall, which is usually more exposed to moisture.

To keep rainwater away from your siding, check your gutters and downspouts periodically to be sure they are clean and in good repair.

Caulk around all exterior joints, where siding butts into windows and corner trim boards, around ventilation screens, hose bibs, dryer exhaust vents, windows, doors and where siding meets brick facing or chimney masonry.

...Edge-checking, seal it with a high-solids paint. The bottom edge of lap siding should appear uniform. Small, lengthwise cracks or voids in the bottom edge may indicate that moisture is being drawn up into the siding. These areas should be repainted. Ask your hardware store for a good grade, high-solids 100% acrylic paint with a self-sealing primer.

Repair minor edge checking with a high-solids paint.

...Mildew, remove it with a commercial mildew remover, or mix one quart of fresh bleach with three quarts of warm water. Scrub the solution onto the siding with a fiber bristle brush; after a few minutes, hose it off thoroughly. Be sure to wear long sleeves, rubber gloves and eye protection. Protect nearby shrubs, plants and grass, and water them down thoroughly afterward.

...Faded, Chalky or Failing Paint, it may be time to repaint. Always repaint before the current paint fails.

Lasting Quality

Your siding protects your house and preserves the quality of your investment. With a little regular maintenance, you can preserve the quality of your siding and keep your home looking its best.

Louisiana-Pacific®
Doing something about it.

Totally Green.
Paper made without chlorine, using recycled paper and totally chlorine-free pulp.

6-5-R/G-1 30M 9/95